MCRMA Technical Paper No. 3

REVISED EDITION

Under Review

CI/SfB

(47) Nh

APRIL 1999

SECRET FIX ROOFING DESIGN GUIDE

THE METAL CLADDING & ROOFING MANUFACTURERS ASSOCIATION

Scope

This paper concentrates on the particular requirements and minimum standards necessary for roll-formed, self-supporting secret fix roofing systems.

The basic principles and requirements for secret fix systems which have been learned by the industry with years of experience are described. However, in all cases a designer should refer to the published information of a manufacturer for the particular requirements of his product.

The performance demands on a secret fix roofing system particularly at low pitches are many and cannot be assumed. The items and principles of this design guide should be considered at an early stage in the design of the overall roof by the building design team. To leave the design and specification of the roof to a late stage will inevitably result in compromises in the performance of the roof.

Composite secret fix systems are not covered within the scope of this guide.

CONTENTS

Terminology (in the context of this paper)

Secret fix roofing system - self supporting metal profile with virtually no through fixings. Variously expressed as concealed fixing, standing seam, clip fix, raised seam.

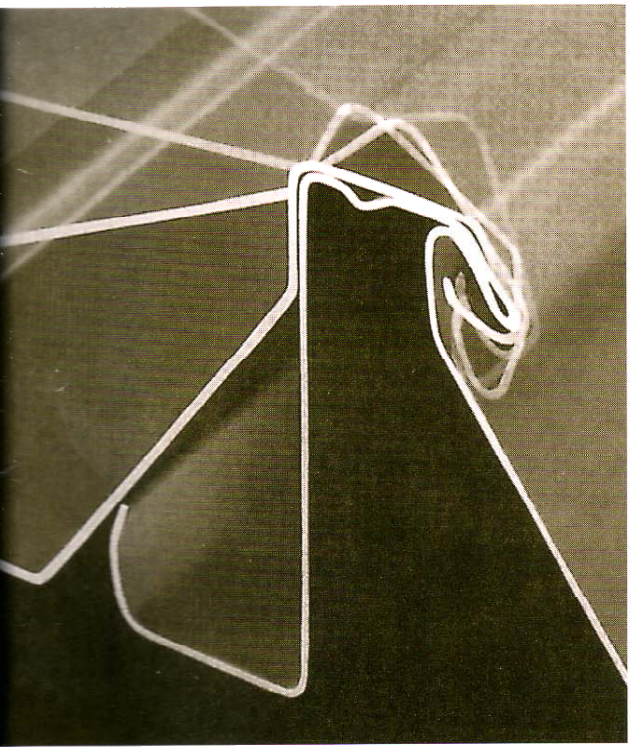

Halter - extruded aluminium bracket providing function of spacer between liner and weathering sheet and of anchorage against uplift.

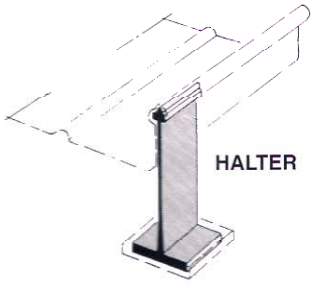

Clip - aluminium or steel bracket attaching one, two or three ribs to a separate spacer system or to the structure.

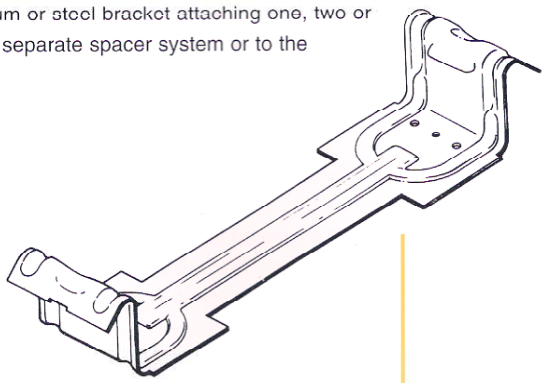

Fixed point - anchorage to prevent slippage or creep of the sheet. Also referred to as a positive fixing or anchorage point.

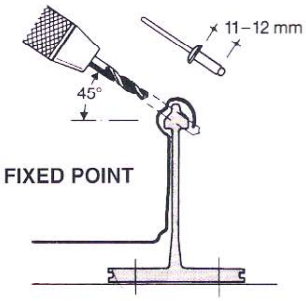

Cinch strap - or panel strap is used on some profiles to reinforce the end lap with a backing plate.

Introduction

2.1 History

The principle of fully supported secret fix roofing is centuries old and is seen on cathedral and church roofs.

The materials used were mainly malleable such as lead and copper. Roll-formed self-supporting secret fix roofing originated in Australasia/USA approximately 40-45 years ago. They were introduced into Europe approximately 30-35 years ago and into the UK approximately 20-25 years ago.

Self-supporting secret fix roofing systems were introduced to reduce the risk of leakage at fasteners and side and end laps. Their success can be seen in the increasing market share they are taking. Their design features allow metal roofing into new markets such as very low pitch roofing as a competitor to fully sealed membrane roofing.

The materials for roll-formed secret fix roofing are primarily steel and aluminium, although other materials are used but to a smaller degree. Most of today's profiles are based on original Australasian/American concepts.

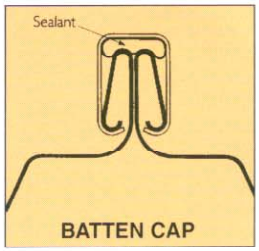

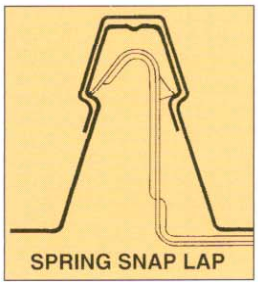

2.2 Systems

Secret fix roofing systems have a variety of forms of connection to the structure and methods of lapping. Typically these are:-

ATTACHMENT

- By clip or halter
- By direct fixing through concealed flange of roofing panel

LAPS

- Spring snap lap
- Mechanically seamed lap
- Batten cap over butt joint
- Panel engaged and rotated through 90°

The method of weather proofing the interlocking lap varies from system to system. Some rely on depth and the formation of an anti-capillary groove within the upstand whereas others employ a secondary sealant strip either factory or site applied.

MECHANICALLY SEAMED LAP

Most systems without secondary sealing strips are permeable to the passage of internal moisture vapour allowing the roof construction to breathe through the ribs whereas systems incorporating sealant strips release internal moisture vapour to the atmosphere by passive ventilation longitudinally at the rib extremities.

A common factor in all systems is that the attachment does not result in an exposed pierce fixing. This reduces the risk of leakage at fasteners, one of the primary reasons for the success of concealed fixing systems.

The cover widths of standing seam profiles are usually less than those of trapezoidal profiles and there is less profiling resulting in wider pans, excellent for drainage of rainwater.

2.3 Applications

Secret fix systems can be used in either a single skin application or as part of a double skin construction incorporating insulation, vapour control layer, liner sheet, etc.

Secret fix systems are used for new build construction, re-cladding and the over-roofing of flat roofs.

2.3.1 Refurbishment

Single skin sheeting is primarily used in re-cladding or over-roofing.

Re-cladding is where a new sheet is positioned over an existing asbestos cement, or metal sheeted roof. It is supported on a sub-purlin fixed to spacer brackets positioned in the troughs of the existing sheets and fixed to the existing purlin system. Insulation is normally added to upgrade the roofing.

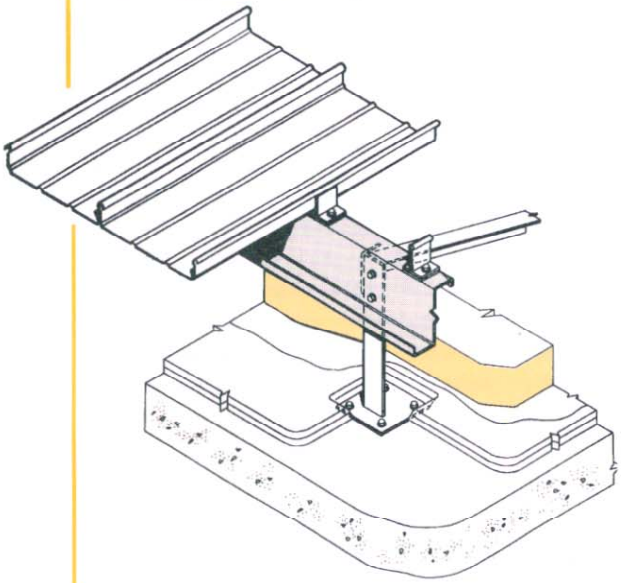

TYPICAL REFURBISHMENT CONSTRUCTION ONTO EXISTING DECK

Over-roofing is where a new sheet is positioned over an existing flat roof (ie felt, asphalt). A substructure has to be installed to create a pitch to drain water away, preferably to an external gutter. The substructure usually consists of a purlin system supported on brackets or stub columns fixed back to the existing support structure, for example concrete slab, steel frame or timber joists.

The substructure must be designed to evenly distribute all roof loads back to the existing structure. Insulation is usually added to upgrade the roofing.

The existing roof should be sealed to provide a vapour control layer, particularly where new supports penetrate the existing weatherproof layers.

Single skin over-roofing (ie cold roof, umbrella roof), where the insulation is on the existing weatherproofing and where there is a substantial void under the new metal sheeting, can be subject to condensation. Designers should consider the risk of condensation and take the relevant steps to alleviate the problem. The void must be cross-ventilated with an eaves/ridge gap of, nominally, 25mm recommended and air leakage from within the building prevented.

Condensation controlling coatings to the underside of the secret fix sheet are available. These are factory applied and hold moisture until evaporation can take place. They do in fact speed evaporation.

Fixings and brackets/halters should be resistant to the effects of the occasional condensation.

In both the above cases, the new sheeting and substructure is lightweight adding a minimal additional dead load of approximately 6-15kg/m^2 to the existing structure.

2.3.2 New build

Double skin constructions are usually used for new build, although they can be used for refurbishment.

The roof construction consists of the secret fix outer sheet, insulation, liner sheet or structural decking, and where required, vapour control layer and breather membrane. The method of creating the insulation depth is dependent upon the type of system:

Variable height clips/halters:- some systems offer a range of clips of varying heights to accommodate various depths of insulation. The clips are fixed direct to the purlin system through the liner sheet (and vapour control layer). Clips can also be fixed direct to a structural decking with rivets or specially designed decking fasteners.

Spacer purlin and support brackets:- systems which only have one height of clip or do not use a separate clip, use a spacer purlin system (zed, top-hat, or proprietary rail system) supported on brackets fixed direct to the purlin system through the liner (and vapour control layer). Spacer purlins without brackets can be fixed to structural decking.

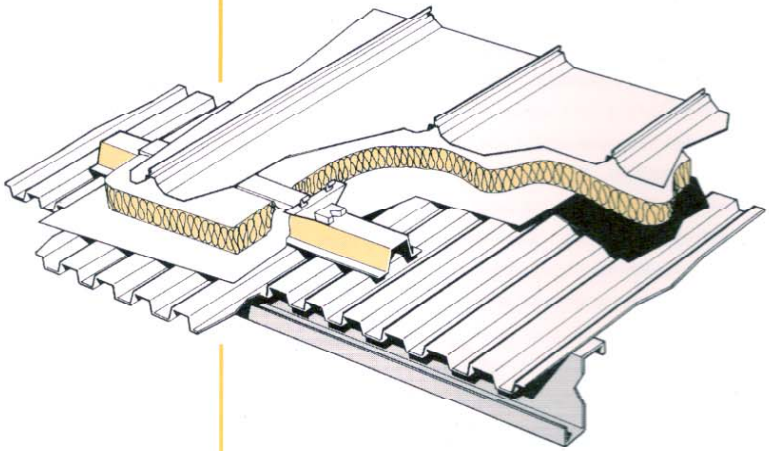

NEW BUILD INCORPORATING LINER SHEET

In most cases the outer sheet acts independently of the liner sheet. The outer sheet takes all external loads and transfers them direct to the purlin/support system. The liner sheet supports the insulation (and vapour control layer), takes internal wind loadings and provides lateral restraint where required.

0.4mm steel liner sheets are not walkable. 0.7mm steel liner sheets of profile depth 30mm plus are walkable and can assist in general safety during construction, remove the need for boards and allow fast initial weathertightness of the roof. Screws should be 5.5mm diameter with 15mm diameter washers and be fixed at 2 per sheet at either side of the side lap with 3 per sheet through the spacer purlin and support bracket lap.

The use of a long spanning structural deck alleviates the need for secondary purlins with the decking spanning from rafter to rafter, usually transverse to the run of the outer sheet.

A vapour control layer should always be used because the structural deck will be across the falls and not self-draining in the event of construction water etc.

In this case, clips/spacer purlins are set out diagonally across the sheeting to evenly distribute all loads to the decking. At the eaves and ridge position, where clips/spacer purlins have to run continuously in the direction of the decking profile, the decking has to be strengthened at these positions, usually by steel plates at the ridge and a steel channel at the eaves position.

Alternatively a counterbatten and batten arrangement consisting of top hat plus zed or proprietary rail system can be used to distribute loads evenly over the structural decking.

The engineer responsible for the roof design should bear in mind that the method of attachment of the secret fix profile to the structural deck will result in point loads or line loads rather than a distributed load. Also, the method of fixing the spacer purlin to the deck may have to resist shear forces as well as tensile forces. Screws are not normally appropriate for structural fixing to light gauge decking and structural rivets, suitable designed, offer a more reliable solution.

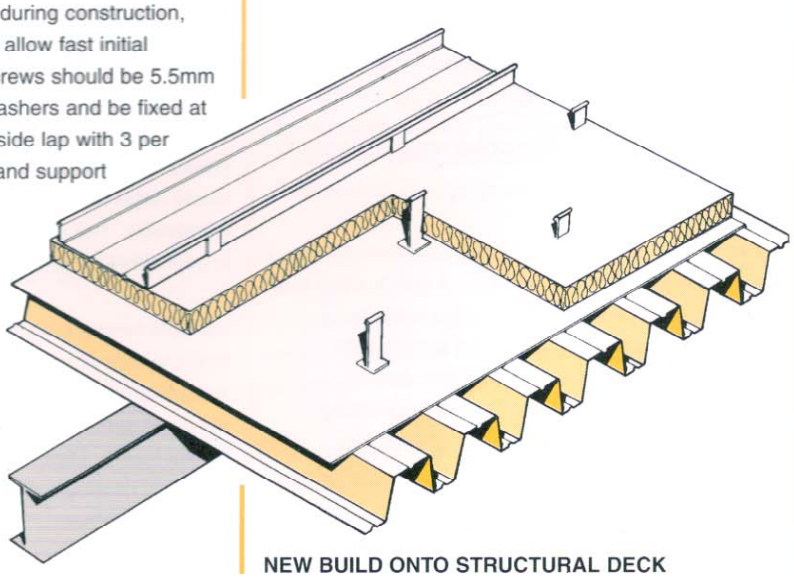

NEW BUILD ONTO STRUCTURAL DECK

Basic requirements

3.1 Minimum falls

Depending upon the manufacturer's claims, falls of 1° are possible but this fall should be regarded as the minimum actual fall under dead loads. To achieve this fall and allow for primary and secondary steel work deflections, structure tolerances and differential deflections, an increased fall may be necessary. Unless justified otherwise by calculation an increase of 1.5° above minimum actual fall is recommended. Curved roofs go through zero fall at the apex. In practice, this does not lead to ponding and water drains away from the apex.

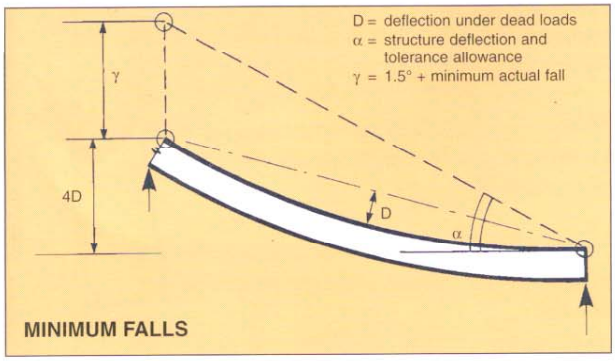

MINIMUM FALLS

Ponding can lead to the deteriorating of coatings and to premature coating failure.

Most profiles are weathertight without special attention down to the claimed minimum fall. However, some profile manufacturers require the installation of an additional sealant within the side lap at pitches less than 5° and in exposed locations.

3.2 Deflections

In the design of the roof, in particular at very low pitches, the deflection should be limited to the values in table 1.

Table 1 Deflection limits for pitches < 5°

Load case	*Deflection limit*
Dead + Wind	L/90
Dead + Imposed	L/200
Dead + Snow drift[1)]	N/A
Point loads[1)]	N/A
Dead	L/500

Notes:
1. These load cases are regarded as exceptional and deflection limits do not apply.
2. L = span between support purlins
3. For pitches > 5° refer to the manufacturer's recommendations.

3.3 Eaves

On lower pitched roofs, ie below 10° pitch there is a risk of rainwater running back under the eaves and entering the building. To avoid this there are two forms of eaves detail:-

1. The ends of sheets can be turned down (with special folding tool/roofing pliers) to give a better run off shape for rainwater. These methods do not entail cutting or tearing of the metal.

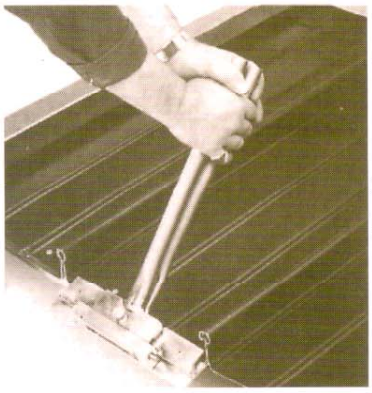

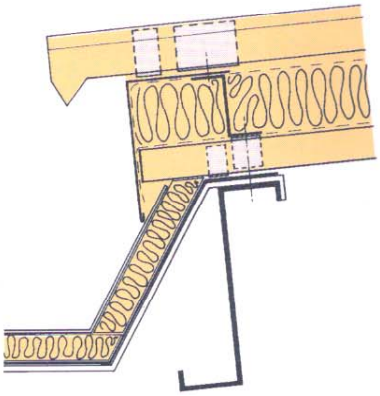

EAVES DETAIL (turned down)

2. Introduce a drip angle fixed in close proximity to the edge of the sheets to act as a baffle against water run-back. The fixings for this angle, usually rivets, are positioned outside the "building envelope" as a fail safe. A filler/seam block closure is usually sandwiched at this position, between the sheet and drip angle.

EAVES DETAIL (drip angle)

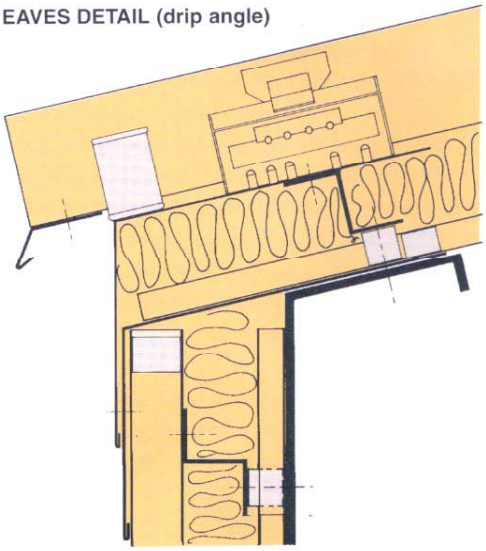

Note 1:
In both the above instances, the turn down and drip angle have an additional structural benefit in that they stiffen the ends of the sheets against flexing and must be used at all roof pitches.

Note 2:
Although these two details show a zed spacer system, the bracket and bar system is equally acceptable.

Some form of drip angle or stiffener is also often required on steeper pitched roofs or vertical cladding for the same reasons. To allow for the installation of drip angles, and/or the turn-down of the sheet, clips/halters are generally positioned at a minimum of approximately 100mm back from end of sheets. The position of the clips/halters can also have an effect on the structural performance of the sheeting. The clear overhang should be at least 50mm.

To prevent damage when working at the eaves position, ie fixing angles or turning down sheets it may be necessary to work from crawl boards on some aluminium roof sheets.

Rigid insulation board may also be positioned directly under the sheets at the eaves position to act as a more permanent solution to the potential of foot traffic damage.

At the eaves there can be a build-up of materials, ie gutter flange, closure flashings etc. which can cause sheeting to be raised at this position. In order to maintain falls at the eaves position, the steelwork can be lowered or the height of the substructure (ie clips, spacer-purlins) may be reduced.

Where the design allows, the liner and/or vapour control layer should drain into the gutter.

Hip valley details are similar to eaves details. The raking edge should be made with a clean cut, ie angle grinders are not suitable. Where specified, the site cut end of steel profiles should be treated with touch-up paint. Attention should be paid to the attachment of the sheet along the raking edge.

A support is needed along hips/valleys in the structure (cleader rail) and within the build up (spacer or halters). Every rib must be secured along valleys/hips and the turn up/turn down provided.

Rake cut fillers or a combination of standard fillers and compressible foam strips should be used where required.

3.4 Long length sheets

End joints in sheeting on roof pitches below approximately 4° are undesirable unless formed from fully engineered end laps. End laps can lead to corrosion of steel profiles and rely upon the installer for integrity.

Some manufacturers offer long length sheets in excess of 40m to avoid end laps, although this is dependent upon transport and site access.

Sheeting over 27.4m long requires a DoT permit and usually a police escort. Permits usually take approximately 8-10 weeks to arrange, increasing the delivery period and costs.

Off-loading should be by spreader beam and crane and it is preferable to lift straight onto the roof (usually at rafter position).

The structure should be checked in advance for the storing of sheet bundles which should also be well secured.

Some systems have the capability for roll-forming on site to achieve lengths over 40m or to avoid access problems, ie the manufacturer supplies a roll-former, coil material and skilled operator.

The contractor or sub-contractor would normally supply labour for handling and craneage for transferring to the roof, where necessary.

Due to recent advantages in roll-forming technology it is possible to site roll-form on the roof at the high level eaves position, thus alleviating the need for craneage.

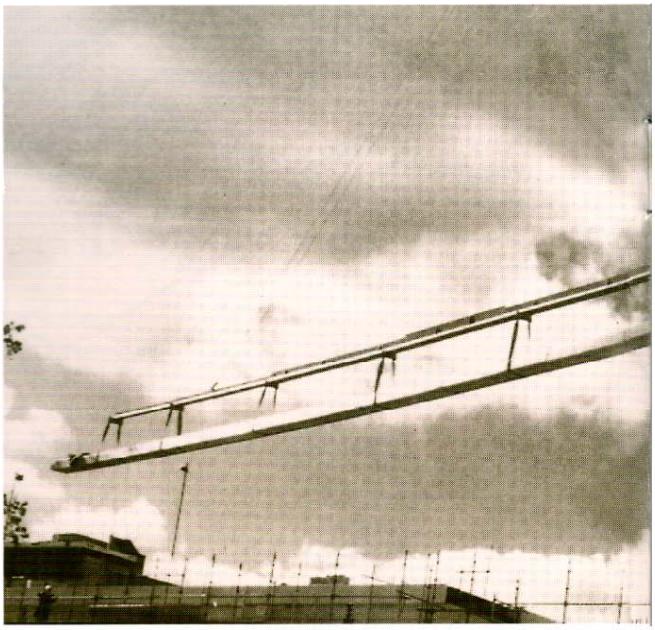

Some profiles cannot be end-lapped because of the shape of the profile. With these a step lap is the only option and this employs the same form of detailing as used in a ridge. Step laps have the advantage of reducing the overall thermal expansion over a roof slope length and can be designed without the use of sealants, depending upon the system used.

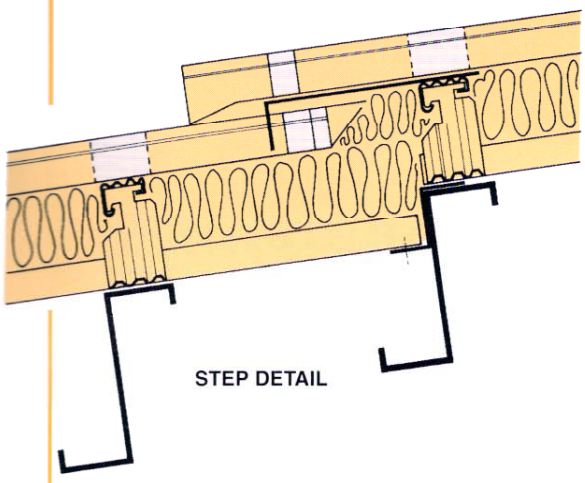

STEP DETAIL

A number of profiles can be end lapped using the cinch strap and backing plate detail. The sheet is factory punched with holes at close centres across the width of the sheet and the sheets are lapped, sealed and fastened through the plate on the underside. To avoid end corrosion or corrosion within the lap the manufacturer's guidance should be followed.

Where end laps are used the success will depend upon the quality of the detail, the integrity and durability of the sealant, and the skill and supervision during installation. Some aluminium profiles can have welded end laps and the manufacturer's guidance should be followed.

HOISTING LONG LENGTHS TO THE ROOF

Any end lap which rigidly fixes two sheet lengths together will need to be able to transmit thermal expansion forces. The end lap should not be fixed to the structure because thermal expansion forces will be constrained unless the end lap position is to be the fixed point.

3.5 Thermal performance and the Building Regulations

The thermal performance of the roof cladding is important because it affects the amount of energy required to heat the building and will influence the running costs and the comfort of the occupants. Approved Document L to the Building Regulations (1995 edition) *Conservation of Fuel and Power* defines the required levels of performance and explains how the requirements can be achieved. It is essentially a refinement of the previous regulations and means that the building designer and cladding contractor need to pay more attention to the thermal performance of individual details of the construction which were not previously defined.

3.6 Vapour control layer

An important aspect of roof design and construction is to minimise condensation so that it does not affect the performance of the insulation and the durability of the construction.

The moisture content of the internal environment should be assessed and, if appropriate, controlled by providing the correct levels of ventilation or by air conditioning. To minimise the potential for interstitial condensation in double metal skin construction the most critical part of the construction is the vapour control layer. This is used to minimise the amount of moisture vapour which can enter the construction by diffusion and air leakage. The vapour control layer must always be on the warm side of the construction, ie at the internal liner.

The vapour control layer can be made by carefully sealing the profiled metal liner or by providing a separate membrane on top of the liner. In either case it is essential that the vapour control layer is continuous throughout the roof and all laps are sealed, including abutments, perimeters, rooflights, penetrations, gutters, ridges etc.

The metal liner must be supported, sealed and fixed at side abutments and liner filler blocks used to minimise air leakage. Air leakage can have a significant effect upon energy use.

Note: For detailed guidance see MCRMA technical paper No 10: Profiled metal cladding for roofs and wall: guidance notes on revised Building Regulations 1995 parts L & F

3.7 Thermal movement

As secret fix sheets are commonly used in long lengths the understanding and control of thermal movement is a prime consideration especially for aluminium sheeting. For control of thermal movement refer to section 3.8 'Fixed points'.

Aluminium flashings also require an allowance for expansion at joints. See section 4.2. In general, aluminium expands at approximately twice the rate of steel.

With an ambient sheet temperature at installation of nominally 5°C this can result in the expansion/contractions shown in table 2.

Table 2 Thermal movement

Material	Colour of coating	Typical temperature range °C		Overall movement mm/m	Movement about ambient mm/m (See Note 2)	
Steel	Light	−10	+45	0.66	−.18	+.48
	Dark	−10	+70	0.96	−.18	+.78
Aluminium	Light (Mill)	−10	+50	1.38	−.345	+1.035
	Dark	−10	+70	1.84	−.345	+1.495

NOTES:
1. Typical roof temperatures may be exceeded in exceptional circumstances.
2. Ambient sheet temperature at installation assumed to be +5C.
3. Coefficients of expansion:
   Steel = 12×10^{-6}
   Aluminium = $23\text{-}24 \times 10^{-6}$
4. Sources: BS5427 1996, British Steel Strip Products, Hoogovens Aluminium. If the sheeting is installed during very cold weather the temperature range base should be decreased to −2°C.

Longitudinal thermal movement is accommodated by the methods of attachment which typically include:

1. The sheeting moves over the head of the clip.
2. The clip has a built-in sliding element.
3. A slotted hole in the concealed flange of profile allows movement.

Transverse expansion is accommodated by the flexibility of a profile across its width.

Structural movement joints should be echoed in the sheeting with full movement joint details.

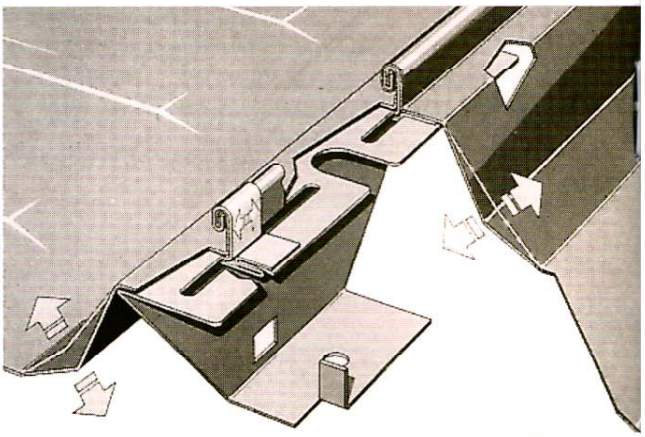

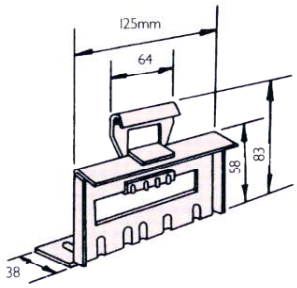

SLIDING CLIP

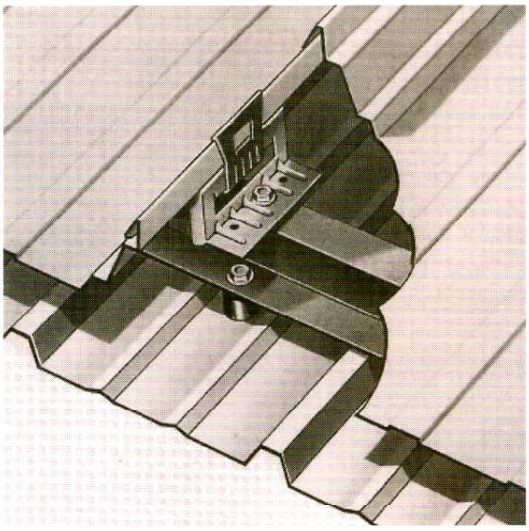

3.8 Fixed points

To control thermal movement and avoid creep, a fixed point is introduced into the sheeting system. The method depends upon the system:

1 Fixing into clip/halter.
2 Bolt into the upstand of the clip/halter.
3 Fixings through trough of sheeting into structure/sub-structure.

The design of the fixed point should accommodate the thermal movement forces of the sheeting. This can occur as a result of metal to metal friction force as the sheet tries to move over the clip/halter creating an over turning movement at the base.

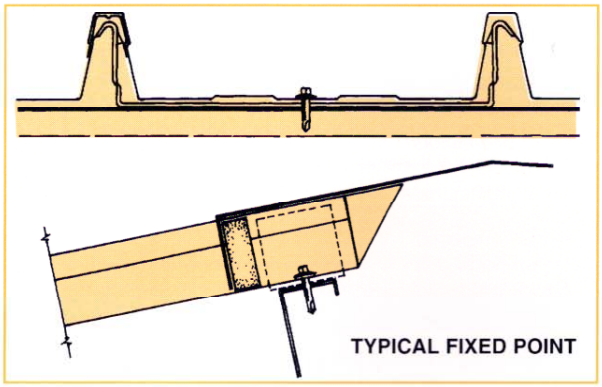

TYPICAL FIXED POINT

Fixed points usually occur at sheet ends allowing movement to be accommodated down slope into gutter or upslope at the ridge.

Positioning the 'fixed point' at the centre of the sheet length will effectively halve the amount of thermal movement and should be considered for extremely long aluminium sheets.

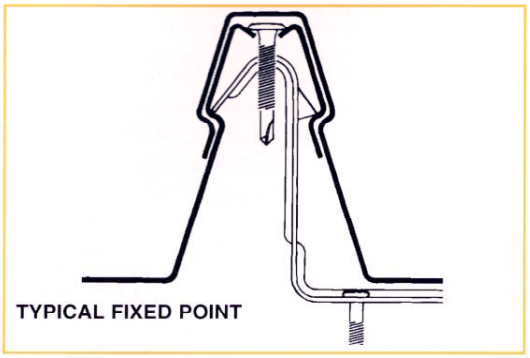

TYPICAL FIXED POINT

The introduction of soakers or special details such as curved or cranked eaves etc. may result in the position of the fixed point being moved.

More than one fixed point in a sheet length should be avoided because it may result in the buckling of sheets, opening of seams or shear of fixings.

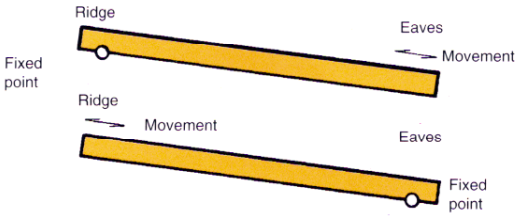

THERMAL MOVEMENT IN RELATION TO FIXED POINT

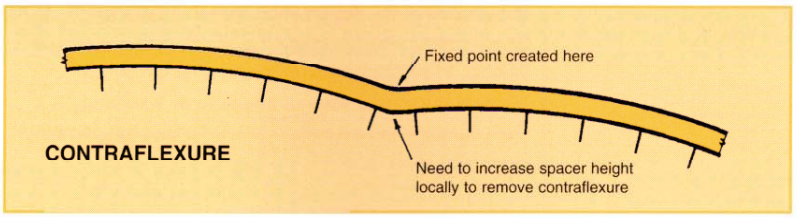

CONTRAFLEXURE

Changes of plane in the roof causing contraflexure can form a fixed point. This could be by design (precambers) or by poor structure tolerances and could result in thermal movement being constrained. Unless designed for, this should be avoided.

3.9 Structural testing

Wind forces on low pitch roofs are more severe than those on pitched roofs and are mostly in the form of uplift or suction forces. The self weight of most secret fix systems is negligible and resistance to uplift is by the attachment strength at clips. Wind pressures are most severe at verges, eaves, ridges (>5°) and at features such as canopies etc. The attachment of the sheet to the clip or the resistance of the side lap to opening are most likely to limit spans under wind loads rather than the strength of the sheet itself.

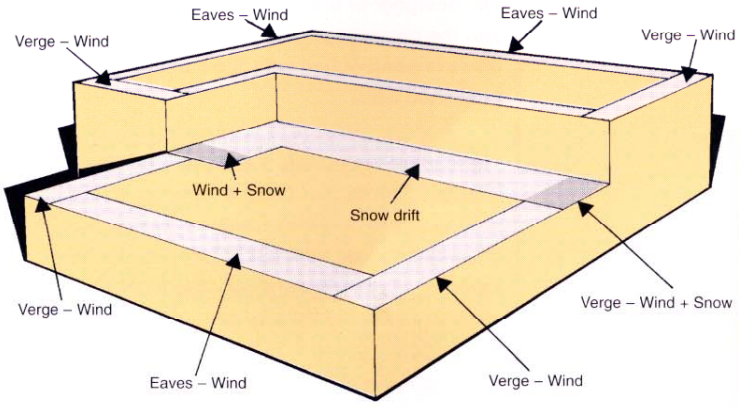

TYPICAL AREAS ON A BUILDING SUBJECT TO HIGHER LOADS AND WHERE PURLIN CENTRES MAY BE REDUCED

The responsibility for defining and specifying wind loads and purlin centres is that of the structural engineer for the building. This should be done before the steelwork contract is let and when purlin centres are still variable. The engineer should be familiar with the building exposure and shape and other factors influencing wind pressures. He should use BS 6399 pt 2 or CP3 chapter 5 pt 2: 1972 and its amendments to establish local and general wind pressures.

In calculating the design wind speed in CP3 the S_2 factor should use Category A because roof sheeting is flexible, in small components and affected by the shortest duration pulses of pressure of 1 second. Deflection should be limited to L/90 under the combined dead plus wind load.

Imposed loads on roof sheeting are due to a uniform snow load or drifted snow loads at roof interruptions, valleys and against upstands such as steps in the roof level, parapets or against adjacent walls. Point loads are due to foot traffic.

Snow loads and point loads are defined and derived from BS 6399 pt 3, and the building structural engineer is responsible for specifying these loads.

Snow drift loads in particular may demand closer purlin centres where drifting may occur.

The deflection of sheeting under exceptional loads such as snow drift and point loads need not be checked as long as the deflection limit of L/200 is satisfied under the combination of dead plus uniform snow load (refer to 3.2).

The designer of the roof is responsible for ensuring that the correct spans are chosen to match the loads in conjunction with the manufacturer's published data.

The load factors in table 3 are from BS5950 and BS5427. The factors are load factors to be used in limit state design in conjunction with full section properties or properties derived from test. They allow for the variability of materials and of profile forming and for the imprecise nature of the load prediction.

Wind loads are dynamic but the strength of attachment is derived by static testing. The attachment strength is also affected by workmanship in achieving accurate setting out, and fastener application. The combination of these effects justifies a load factor or factor of safety greater than that employed for the strength of the profile under imposed loads. BS5427:1996 Appendix A states a minimum factor of safety of 2.0 for the fixing which, for secret fix systems, will mean the strength of attachment of the fixing assembly.

The testing of attachment strength should be on full size panels at maximum span. The load should be applied uniformly across the profile pans by vacuum, air bag or weight bag to a test area at least two panels wide and in double span. The flexibility of secret fix profiles can significantly affect attachment strength results. Failure can be of the fixing, by lap separation or by rib buckling etc. The testing of parts of a system in isolation can lead to misleading or optimistic values. The testing should also involve cyclic loading to simulate fatigue on fasteners and clips over the life of the roof.

Table 3 Load factors

Load case	Load factor	Design case
Dead + imposed Dead+Snow drift Dead+Wind Dead–Wind	Wd+1.6 Wi Wd+1.05 Wsnow 1.4 Wd+1.4 Wind Wd–1.4 Wind	Bending of profile
Dead–Wind	Wd–2.0 Wind	Attachment

NOTES:
Wd – dead load of sheet
Wi – imposed load BS6399 Pt 3 1988
Wsnow – snow drift load BS6399 Pt 3 1988
Wind – wind load usually uplift BS6399 Pt 2

Secret fix profiles attached by clips or formed from aluminium do not provide sufficient or long term lateral restraint to the top flange of roof purlins. Lateral restraint should be provided by a liner profile or other means.

Experience shows that 0.4mm steel or thicker liner panels attached at 500mm centres maximum using 5.5mm diameter fasteners generally provide sufficient restraint to light gauge purlins. Please note that 0.4 mm steel liner sheets are not walkable.

Some 0.7mm aluminium liner profiles of certain alloy grades can give lateral restraint and the manufacturer's guidance should be sought.

As part of the sheeting structural requirements, there are usually minimum and maximum overhang dimensions. The minimum dimension is to avoid end influences reducing attachment strength and the maximum is to reduce the risk of damage under foot traffic etc. and can vary with material, thickness and pitch.

These dimensions should be taken into account during steelwork detailing.

3.10 Tolerances

Secret fix systems are usually of a high engineering quality mainly because of the critical formation of the laps for engagement with clips or to lock together. These systems are less likely to accommodate large fluctuations in levels of steelwork than trapezoidal sheeting.

Greater considerations must be given to manufacturing and erection tolerances in steelwork if it is designed to accommodate secret fix systems. Manufacturers' recommendations and guidance should be sought at an early stage in project design as their tolerances may be more critical than British Standard steelwork tolerances.

The tolerances of a new roof structure or of an existing roof can be significant for two reasons:-

1 At very low pitches variations in the level of a structure can have a significant influence on falls. In section 3.1 it is suggested that the fall be increased in design to accommodate structure tolerances among other factors.

2 Some secret fix systems are less tolerant of clip position and alignment than others. In all clip systems a wrongly positioned clip will to some extent affect the ability to accommodate thermal expansion and contraction and can reduce attachment strength.

The tolerances recommended by a manufacturer for structure position and other factors such as the spacing of fixing clips must be heeded and may be more demanding than illustrated in table 4.

The maximum step at purlin to purlin lap or sleeved joints is ±10mm if a double skin roof is used, ±5mm for single skin roofing.

Purlin levels on curved roofs need to be controlled to avoid the purlins 'shadowing' through the roof construction.

PURLIN LEVELS

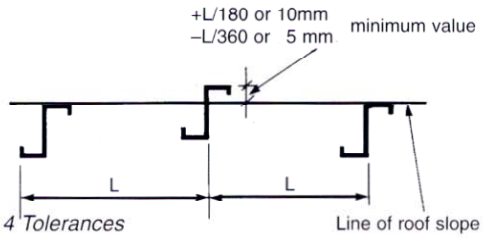

Table 4 Tolerances

PURLIN/CLIP SLOPE (particularly relevant to curved roofs)

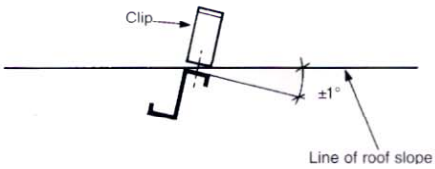

CLIP SPACING

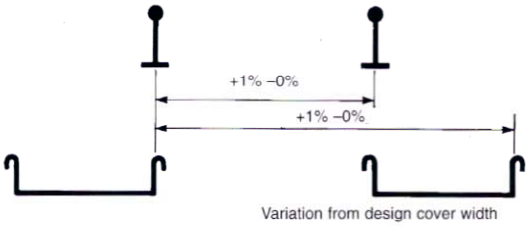

CLIP ALIGNMENT TO RIBS

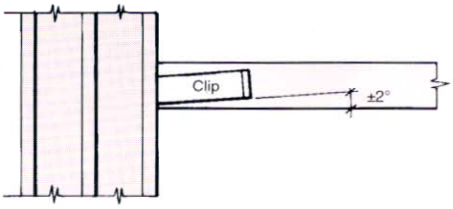

INSTALLATION STRUCTURE TOLERANCES

Element	Tolerances
Purlin levels	+L/180 or 10mm (*1) –L/360 or 5 mm (*1)
Purlin slope	±1° (*3)
Clip spacing	+1%, –0% from sheet cover width (*2)
Clip alignment to rib	±2°

NOTES

*1 Choose smaller value
+ = above design level,– = below design level
L = purlin spacing
Tolerance is in the level of a purlin relative to the purlins either side. Rafter to section 3.3 for the need for eaves purlins to be accurately positioned relative to the rest of the slope.

*2 The spacing of clips can affect attachment strength, check manufacturer's guidance.

*3 The roof purlins should always be at 90° to the roof slope even if the slope is very low.

4 These tolerances are for guidance only, check with the manufacturer of the roofing system for any particular tolerance demands.

3.11 Ridge

To provide a water stop and stiffen the profile laterally against flexing the detailing at the ridge consists of:-

1 Turning up the pan using a special tool supplied by the manufacturer. The turn-up is achieved without cutting or tearing to achieve a full 90° turn-up and does not rely on sealants.
2 If the end of the sheets are to be turned up when in position, space must be left to accommodate the specialist folding tool. This dimension should also be taken into account when detailing and positioning steelwork. Some systems cannot be turned up effectively in place and the turn-up must be carried out before installing the sheets.
3 Profiles that cannot be turned up employ a shaped metal end dam bedded in sealant and secured to the pan.

As a second line of defence and to reduce air leakage a shaped filler block is positioned in front of the turn-up/end dam.

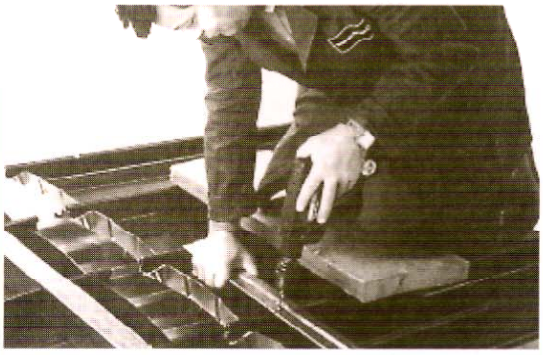

AIR BAFFLE

To protect and keep filler blocks in position, act as an air baffle and improve appearances, the ridge cap may have a turned down edge notched over the ribs or alternatively a separate baffle flashing under the ridge cap.

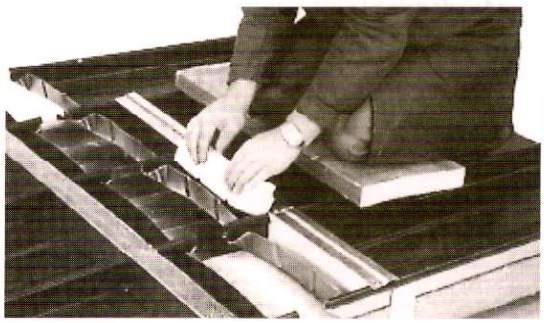

FILLER BLOCK

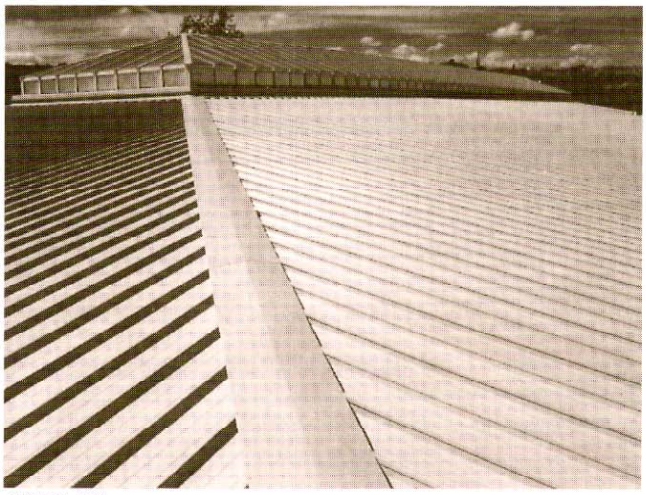

TYPICAL HIP

To prevent damage particularly to aluminium roofing while working at ridge, operations can be carried out from crawl boards.

At a hip the detail should be treated in a similar fashion to a ridge but with additional support under the hip line in the form of a cleader rail. Note that some turn-up tools require rib support and are not appropriate for a raking turn-up where roofing pliers or purpose-made hip turn-up tools are more suitable. Raking filler blocks are available for most systems to complete the air baffle.

Bow-over ridges employ a continuous sheet from eaves to eaves spreading over the ridge without a separate ridge capping. The maximum roof slopes and position of supports are usually dependent upon the natural curvature of the profile and the manufacturer's recommendations should be followed. It may be necessary, particularly with aluminium sheets, to introduce a support to the underside of the sheets at the apex position in order to prevent permanent deformation of the profile due to foot traffic. It is not usually necessary to have a clip/halter fixing at this position (refer to 4.3.1).

Note that the bow-over ridge will form a fixed point.

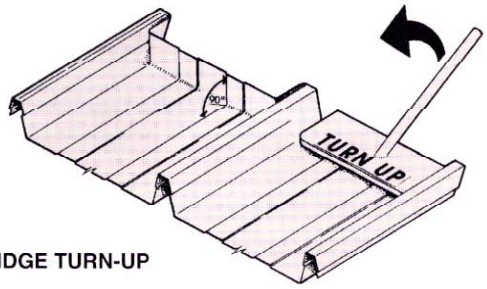

RIDGE TURN-UP

General requirement notes

3.12 Durability

Manufacturers of metal roofing quote durability performance in a number of different ways, such as the period to first maintenance or the ultimate life in terms of weathertightness.

Factors which can affect the durability of metal roofs are:-

Environment coastal/marine or heavily polluted industrial atmospheres can affect the coating

Ponding standing rainwater, if prolonged, can permeate the coating leading to possible delamination.

UV light strongly pigmented or dark coatings are more likely to be affected by UV light.

Mechanical damage care during handling and installation is essential to preserve coating integrity.

Process fumes the careful positioning of all ventilation systems through which pass fumes or gases likely to be harmful to the roof material must be considered not only during the design of the initial building and equipment but at any subsequent change in processes.

Maintenance The quality and frequency of inspection and maintenance. Roof traffic should be kept to a minimum and by authorised persons only.

Mill or stucco-embossed aluminium forms a dull grey inert oxide layer during weathering providing good durability in most environments Contact with dissimilar metals is to be avoided especially in damp locations or with mortar or other alkali-bearing materials.

The overall durability of metal roofing is that of its weakest link and it can be reduced, for example, by the use of an unsuitable sealant especially if it is in an inaccessible position, such as an end lap, ridge dam or gutter joint.

Metal roof sheets can be used down to very low actual roof pitches but manufacturer's recommendations must be followed.

Translucent rooflights can degrade with UV light and temperature but should be replaceable without excessive disruption.

4.1 Drainage

Gutters should be designed with a minimum depth of 150mm and a clear width between sheet ends of at least 300mm for a boundary wall gutter or 500mm for valley gutters. This will allow for the cleaning of gutters, foot traffic in a valley gutter and maintenance to the gutter when required. Eaves gutters should also have an allowance for cleaning. The gutter size and capacity should be designed using BS6367: 1983.

4.2 Flashings

- Flashings and flashing joints, particularly in aluminium, should allow for thermal movement.

- Only flashings that fully nest should be lap jointed. Lap joints should be a minimum of 150mm and should be sealed. Primary fixings should not penetrate the lap joint but should be positioned either side of it. Lap joints to sloping flashings (eg verges) should be formed with the slope.

Note: For detailed guidance refer to MCRMA technical paper no 11: Flashings for metal roof and wall cladding: design, detailing and installation guide

ALUMINIUM FLASHINGS

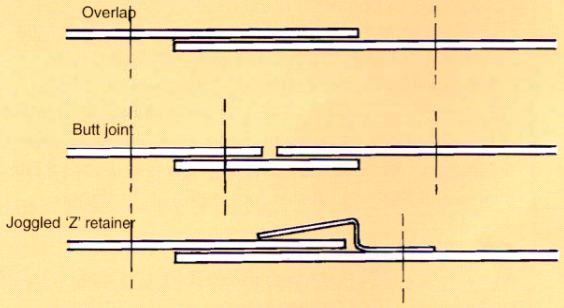

Weather protection must be provided at the overlap position, this may be by means of silicon mastic sealant or suitable sealer strips.

Greater security can be achieved by making small joggled 'Z' sections which are fixed to one side of the lap, and hold the two plies in contact without restricting thermal movement.

- Butt straps used for flashing joints should be a minimum length of 150mm and should be sealed. Allow an expansion gap based on the length of flashing and type of material, between lengths of flashing at butt strap positions (see Table 2 - thermal movement in section 3.7). In aluminium, butt straps should be fixed to one length of flashing only and, for greater security in exposed conditions, small joggled 'Z' sections may be used to hold down the unfixed side of the joint without restricting thermal movement.

- Flashings should be fixed at 450mm centres maximum.

- Some systems use proprietary brackets to clip on verge and other flashings.

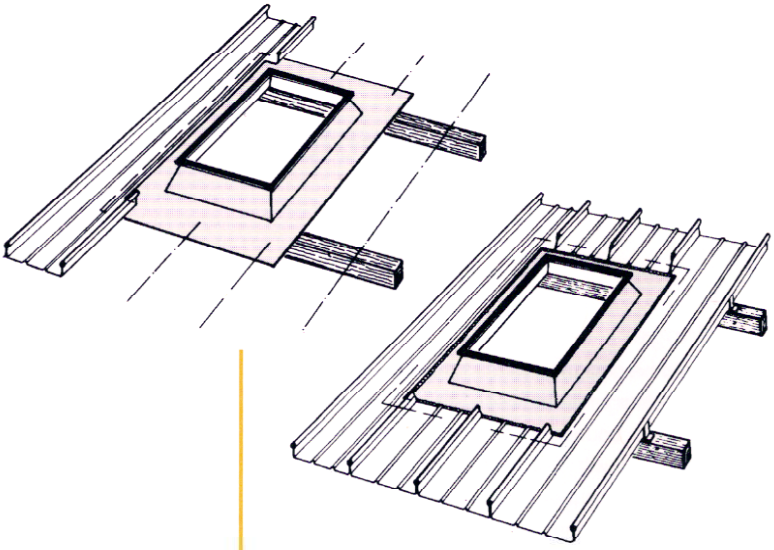

WELDED PENETRATION SOAKERS (ALUMINIUM)

- Allow water to be fully drained from behind penetrations. Stitch flat apron flashing laps at 75mm - 100mm nominal centres through the sealant. Fixings should not be placed below the sealant.

- Aluminium flashings and soakers to penetrations may be welded into aluminium secret fix systems. Adequate safety measures and protection must be provided to the roof construction during welding operations. Advice should be sought from the system manufacturer or a specialist welding company.

- At abutments to brickwork use fully dressed over-flashings draped over the roof upstand flashing. Avoid direct contact of lead over-flashings with aluminium, protect the aluminium with a barrier tape or paint or use a lead substitute. Roof abutment flashings to have a minimum 150mm upstand leg.

- Keep flashing sizes to the minimum necessary for function. Avoid large unstiffened or unsupported flat areas of flashing. Avoid foot traffic on flashings.

4.3 Special features

For detailed guidance refer to MCRMA technical paper No. 2: Curved sheeting manual

4.3.1 Curved sheets

There are generally three methods used for creating curved sheeting. In all cases the system manufacturer's advice should be sought with regard to system and dimensional capabilities.

- **1 Natural curvature**
  Sheet can be bent over steel work to form an arch roof or bow-over ridge detail (for continuous sheeting). Restricted to fairly high internal radii, usually between 25 and 60m and varies with gauge and profile.

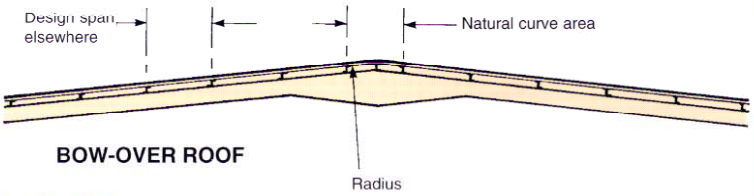

BOW-OVER ROOF

A degree of oil canning can occur in natural curved sheeting but this is not detrimental to the function of the roof or coating.

The use of 0.7mm walkable steel liner makes the installation of natural curved sheeting safer.17

VERTICAL IN-OUT FLASHING

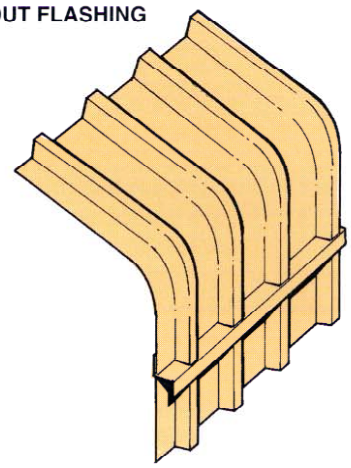

EAVES GUTTER

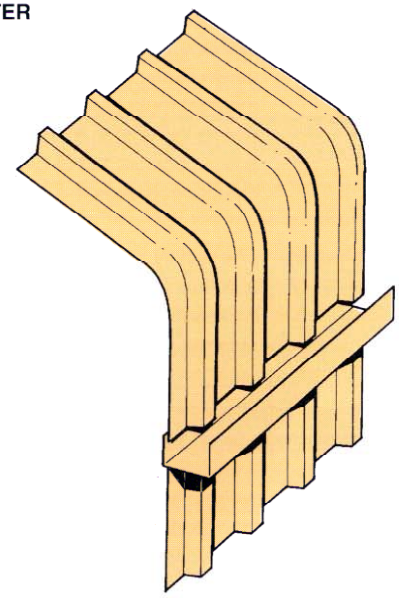

SECRET GUTTER

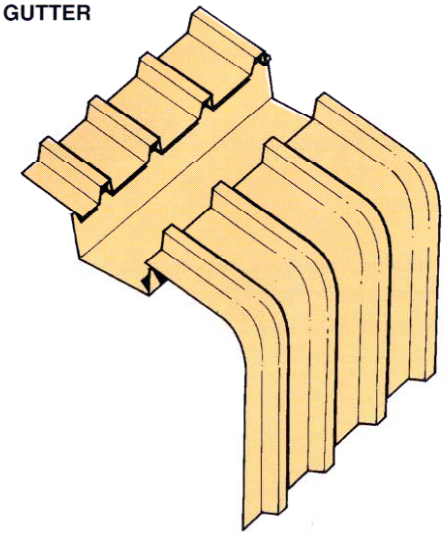

MECHANICALLY SEAMED LAP ON SMOOTH CURVED SHEET

- **2 Smooth roll curved**
  Sheets can be factory curved to relatively low internal radii by stretching the upstand of the profile. The material is not mechanically deformed with crimps or indentations. Multi-radii (elliptical) and combination convex and concave (wave-form) curved sheets can also be formed utilising this process.

- **3 Crimp curved**
  Tight radius curves can be achieved by mechanically deforming the sheet by crimping.

- Curved sheeting is only usually feasible with mechanically seamed lap joints and spring snap lap joints, where sheets are installed directly from above and are not rotated into position.

- When pre-curved sheets are used, sheeting becomes more rigid and therefore steelwork tolerances become more critical.

- Pre-curved sheets are delivered to site on curved trestle structures on the lorry. The curved sheets are hoisted direct to the roof using lifting beams provided for the purpose.

- The setting out of sheets should be to post curved dimensions, not system dimensions.

- It is difficult to lap onto normal sheets and the possibility of breaking up the sheeting, with details such as concealed gutters or vertical in-to-out flashings, needs to be considered.

- Curved eaves make safe ladder access difficult.

4.3.2 Tapered sheets

- The cover width of a sheet increases over its length allowing the design of conical/curved (on plan) roofs etc.

- As the outer sheet has an ever-changing cover width, fixing in double skin construction is usually onto a spacer purlin/bracket arrangement.

- Tapered sheets are normally laid on pre-installed clips/halters set out on radial lines.

- Tapered and curved sheets are also available allowing the design of dome-shaped roofs, etc. .

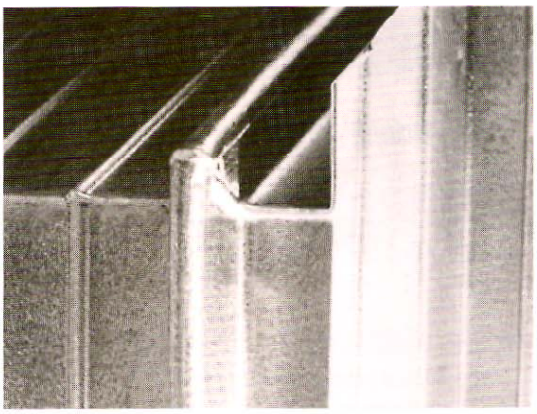

WELDED CRANKED SHEETS

4.3.3 Cranked sheets

Where an abrupt change of slope is required, ie roof pitch to vertical at the eaves, two forms of detail/fabrication are common.

- 1 Factory/site welded crank in aluminium. The sheeting is mitre cut and welded to the required angle.

- 2. Fabricated knee joint - usually with steel systems. The upstand of sheeting is cut and the sheet folded into position. A fabricated knee joint is positioned over cut upstand, then riveted and sealed into position.

The use of tight radiused and cranked sheets creates a 'fixed point' in the secret fix system. Thermal movement should be accommodated away from this point.

Refer to MCRMA technical paper No 1: Recommended good practice for daylighting in metal clad buildings

4.4 Daylighting

- Use rooflighting methods recommended by the roof system manufacturer.
- At less than 4° single length rooflight sections are preferable or barrel rooflights that shed water to either side.
- At above 4° end laps are feasible but with careful design and installation.
- Position rooflights to start at the ridge.
- Position rooflights away from high local uplift areas.
- PVC rooflights can degrade with UV light and temperature, avoid creating an 'oven' effect by underdrawing PVC rooflights with dark coloured roof sheets.
- Strip rooflights are easier to weather than chequerboard pattern rooflights in most systems. Ridge rooflights are best.
- Rooflights can limit the roofing span.
- Careful vapour control layout detailing is necessary around rooflights in medium to high humidity buildings.

4.5 Sheet replacement

The method of replacement of damaged in-situ sheets varies with the type of system. Some profiles can be lifted for internal inspection but with most profiles removal involves cutting the sheet along its length and back substituting a new sheet. Curved sheets are very awkward to replace. The sheeting manufacturer's guidance should be sought.

4.6 Standards

At present there is no British or European standard or Code of Practice covering the manufacture and application of secret fix systems. Various elements, where applicable, are adopted from existing standards covering traditional trapezoidal sheeting , for example BS 5427.

Performance data for systems is determined by testing and it is desirable that a recognised third party certification is obtained to verify claims, for example British Board of Agrément certificates.

4.7 Health and safety

As in all building work good safety standards are essential to prevent accidents. In accordance with the Health and Safety at Work Act and the Construction (Design and Management) Regulations or CDM Regulations 1995, the building should now be designed with safety in mind, not only for the construction period itself but also throughout the normal life of the building. This must include considering the safety of people involved in maintenance, repair and even demolition. It might mean providing permanent access to the roof, walkways and parapets, for example.

Construction of the roof is one of the most hazardous operations because of the potential for falls or material dropping onto people below. The contractors must plan and document a safe system of work before starting construction. This information must be detailed in a safety file prepared by the planning supervisor (using information provided by the designer) and passed on to the client at handover.

The use of a 0.7mm walkable steel liner panel increases safety, speeds initial watertightness and benefits the main contractor's programme.

In addition to the contractor's basic safe system of working the following specific precautions should be taken when using metal cladding:

- 1 Take care when handling sheets or panels to avoid cuts from the edges of the sheets. Wear gloves to protect hands.
- 2 Take normal precautions when handling awkward objects to avoid lifting injuries, in accordance with the Manual Handling Operations Regulations.
- 3 When cutting, wear goggles and dust masks.

If in doubt about any safety issues guidance can be obtained from the construction section of the local Health and Safety Executive.

MCRMA technical papers

Liability

Whilst the information contained in this design guide is believed to be correct at the time of going to press, the Metal Cladding and Roofing Manufacturers Association Limited and its member companies cannot be held responsible for any errors or inaccuracies and, in particular, the specification for any application must be checked with the individual manufacturer concerned for a given installation.

The diagrams of typical constructions in this publication are illustrative only.

No 1	Recommended good practice for daylighting in metal clad buildings
No 2	Curved sheeting manual
No 3	Secret fix roofing design guide
No 4	Fire and external steel-clad walls: guidance notes to the revised Building Regulations, 1992
No 5	Metal wall cladding design guide
No 6	Profiled metal roofing design guide
No 7	Fire design of steel sheet clad external walls for building: construction, performance standards and design
No 8	Acoustic design guide for metal roof and wall cladding
No 9	Composite roof and wall cladding panel design guide
No 10	Profiled metal cladding for roof and walls: guidance notes on revised Building Regulations 1995 parts L & F
No 11	Flashings for metal roof and wall cladding: design, detailing and installation guide

Other publications

Manufacturing tolerances for profiled metal roof and wall cladding

Built-up metal roof and wall cladding systems: tables of insulation

Cladsafe latent defects insurance scheme: basic guide

MCRMA Membership Charter

The Complete Package CD ROM

Noise insulation using profiled metal cladding: the advantages in recent years.

THE METAL CLADDING & ROOFING MANUFACTURERS ASSOCIATION LIMITED

18 MERE FARM ROAD
PRENTON · BIRKENHEAD
CH43 9TT

TELEPHONE: 0151-652 3846
FACSIMILE: 0151-653 4080
E-MAIL: mcrma@compuserve.com

Designed and produced by Leighton Communications

£5.00
incl. P & P